FARRAGUT VISUAL RESOURCES REVIEW BOARD
AGENDA

Farragut Community Center
Medium Classroom
Tuesday, December 17, 2024
6:00 p.m.

1. Approval of minutes for the October 22, 2024, meeting.
2. Staff report - wall signs approved in the past month.
3. Review of a primary permanent ground sign for Y-12 Credit Union, located at 13128 Kingston Pike.
4. Review of a primary permanent ground sign (reface) for CarFix, located at 11926 Kingston Pike.
5. Review of proposed changes to an existing subdivision entrance sign, McFee Manor Subdivision.
6. Review of a primary permanent ground sign (reface) for Kohl's-Sephora, Kingston Pike frontage, located at 11926 Kingston Pike.
7. Review of a primary permanent ground sign (reface) for Kohl's-Sephora, Glen Abbey Blvd. frontage, located at 11926 Kingston Pike.

It is the policy of the Town of Farragut not to discriminate on the basis of race, color, natural origin, gender, gender identity, sexual orientation, age, religion, disability or veteran status pursuant to Title VI of the Civil Rights Act of 1964, Public Law 93-112 and 101-336 in its hiring, employment practices and programs. To request accommodations due to disabilities, please call 865-966-7057 in advance of the meeting

MEMORANDUM

TO: Farragut Visual Resources Review Board
FROM: Bart Hose, Assist. Community Development Director
SUBJECT: Scheduled Meeting - Tuesday, December 17, 2024, at 6:00 p.m.

AGENDA

1. Approval of Minutes for October 22, 2024, Meeting

2. Staff Report – Wall Sign Applications Approved Since the Last Meeting
The following wall sign applications have been approved since the last meeting:

- HIS Security – 11426 Kingston Pike.
- Soleo Health – 11115 Kingston Pike.
- Allstate – 11416 Kingston Pike.
- Y-12 Credit Union – 13128 Kingston Pike (East Wall Elevation).
- Taco Bell – 11217 Kingston Pike.
- Apotheca – 10809 Kingston Pike.
- Farragut Pharmacy – 11424 Kingston Pike.
- Roll'em Up Taquito – 117 Lovell Road.
- CarFix - 11926 Kingston Pike.

3. Ground Mounted Sign Applications

a) Y-12 Credit Union – Located at 13128 Kingston Pike
Primary Ground Mounted Sign located off Kingston Pike.
Y-12 Credit Union is requesting approval to replace and upgrade the permanent ground mounted sign at their facility located at 13128 Kingston Pike.

This item has been withdrawn and moved to the January meeting at the request of the applicant.

b) CarFix – Located at 11926 Kingston Pike
Primary Ground Mounted Sign located off Kingston Pike.
Carfix is requesting approval to reface the permanent ground mounted sign at their facility located at 11926 Kingston Pike.

The request involves refacing an existing sign with no additional changes. The staff can recommend approval.

c) McFee Manor Subdivision – Located of McFee Road
Permanent Subdivision Sign located off McFee Road and Providence Glen Lane.
McFee Manor Subdivision is requesting approval to renovate and upgrade their subdivision entrance sign located at the corner of McFee Road and Providence Glen Lane.

The McFee Manor Subdivision HOA is requesting approval to renovate and update their existing entrance sign. The project involves repairing or replacing some elements and painting other elements to update the look of the existing sign. The staff can recommend approval.

d) Kohl's + Sephora, Kingston Pike Frontage – Located at 11930 Kingston Pike
Primary Ground Mounted Sign located off Kingston Pike.
Kohl's - Sephora is requesting approval to reface and upgrade the permanent ground mounted sign along the Kingston Pike frontage at their facility located at 11930 Kingston Pike.

Kohl's + Sephora is requesting approval to reface the existing Kohl's monument ground sign along Kingston Pike. No other changes to the sign are proposed and the landscaping and external lighting for the sign are in place. The Board does, however, need to discuss the required street address element of the sign. There is currently no address on the sign, but the current code calls for the address numbers to be displayed at the top of the sign. In addition, there is a question as to whether just the property, which is also the Kohl's, address needs to be on the sign, or whether the address range for the larger strip center needs to be displayed. There are commercial centers in Town that are addressed both ways, some with just the main property address and some with the full address range for the center, although the address range method seems to be more prevalent. This issue needs to be discussed by the Board.

e) Kohl's – Sephora, Glen Abbey Blvd. Frontage– Located at 11930 Kingston Pike
Primary Ground Mounted Sign located off Glen Abbey Boulevard.
Kohl's - Sephora is requesting approval to reface and upgrade the permanent ground mounted sign along the Glen Abbey Boulevard frontage at their facility located at 11930 Kingston Pike.

Kohl's + Sephora is requesting approval to reface the existing Kohl's monument ground sign located along Glen Abbey Blvd. No other changes to the sign are proposed and the landscaping and external lighting for the sign are in place. The previously noted addressing issue does not apply to this sign because the property is not addressed off Glen Abbey Blvd., and including a Kingston Pike address on the sign could cause confusion. The staff can recommend approval.

FARRAGUT VISUAL RESOURCES REVIEW BOARD – Minutes

The Farragut Visual Resources Review Board met on Tuesday, October 22, 2024. Secretary Stephen Marlowe presided. Members in attendance were Scott Russ, Sue Stuhl, Stephen Marlowe, and Joe LaCroix. Marty Layman, Brittany Moore, David White and Naddia Talo were absent. The staff representative was Mark Shipley.

Secretary Marlowe called the meeting to order at 7:00 pm.

1. Minutes

A motion was made by Sue Stuhl to approve the September 24 minutes as submitted. The motion was seconded by Scott Russ and the motion passed unanimously.

2. Staff Report – Wall Sign Applications Approved in the Past Month

The staff reported that the following wall sign applications had been approved since the last meeting:

- Concord Veterinary Hospital (Two Wall Signs – One facing Kingston Pike and one facing Peterson Road) – 11904 Kingston Pike.
- Nail Bakery Spa – 115 Lovell Road.

3. Ground Mounted Sign Applications:

a) Nail Bakery Spa - 115 Lovell Road

Individual Tenant Panel Sign located along Lovell Road.

The staff noted that the panel had been designed with a white background to be consistent with the other panels on the structure and that it appeared to be reasonably legible. Staff recommended approval.

A motion was made by Sue Stuhl to follow the staff's recommendation. The motion was seconded by Joe LaCroix and the motion passed unanimously.

4. Landscape Plan Applications:

a) Echo Suites Hotel – 11244 Outlet Drive

The staff reviewed this item and recommended approval subject to the landscape plan being modified to reflect changes to the site plan associated with the Planning Commission's approval. Annette Hommel was present on behalf of the applicant.

A motion was made by Scott Russ to follow the staff's recommendation. The motion was seconded by Sue Stuhl and the motion passed unanimously.

It is the policy of the Town of Farragut not to discriminate on the basis of race, color, national origin, age, sex, or disability pursuant to Title VI of the Civil Rights Act of 1964, Public Law 93-112 and 101-336 in its hiring, employment practices and programs. To request accommodations due to disabilities, please call 865-966-7057 in advance of the meeting.

5. Changing the meeting time from 7:00 p.m. to 6:00 p.m.

A motion was made by Sue Stuhl to support changing the meeting time from 7:00 p.m. to 6:00 p.m. The motion was seconded by Scott Russ and the motion passed unanimously.

6. Discussion of November and December meeting dates and holiday schedules

A motion was made by Joe LaCroix to combine the November and December meetings and for the meeting to be conducted on December 17. The motion was seconded by Sue Stuhl and the motion passed unanimously.

Stream Clean Up. The staff asked board members if they wanted to conduct a stream clean up. Since three board members were not present it was noted that the Town staff would reach out to the full board through email to determine if there was interest in a stream clean up either this fall or early next year.

The meeting adjourned at 7:18 p.m.

It is the policy of the Town of Farragut not to discriminate on the basis of race, color, national origin, age, sex, or disability pursuant to Title VI of the Civil Rights Act of 1964, Public Law 93-112 and 101-336 in its hiring, employment practices and programs. To request accommodations due to disabilities, please call 865-966-7057 in advance of the meeting.

Wall Signs Approved Since the October VRRB Meeting

The following wall signs have been approved since the October 22nd Visual Resources Review Board meeting. Please see the attached plans and illustration sheets for details.

- HIS Security – 11426 Kingston Pike.
- Soleo Health – 11115 Kingston Pike.
- Allstate – 11416 Kingston Pike.
- Y-12 Credit Union – 13128 Kingston Pike (East Wall Elevation).
- Taco Bell – 11217 Kingston Pike.
- Apotheca – 10809 Kingston Pike.
- Farragut Pharmacy – 11424 Kingston Pike.
- Roll'em Up Taquito – 117 Lovell Road.
- CarFix - 11926 Kingston Pike.

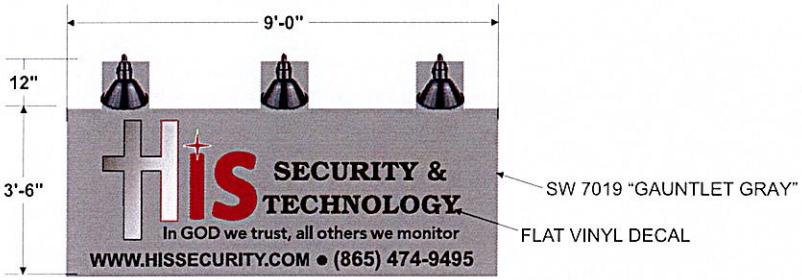

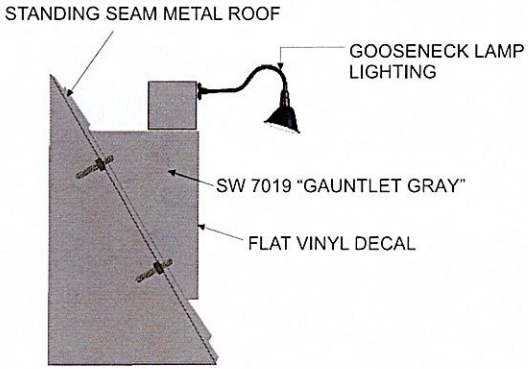

SIDE VIEW

GOOSENECK LIGHT FIXTURES
USE SATCO S28737
4000K - WARM WHITE
SETTING ON LED BULBS

Town of Farragut
Sign Permit
BP-2024-841-SP
Approved, 12/5/24

SIGNCO inc.
PLASTIC.NEON.ELECTRONIC

This drawing is the property of SIGNCO, Inc. & to be used for contractual purposes between the customer & SIGNCO, Inc. only. Unauthorized use of this information will result in claims up to 1/3 value of the job represented on this drawing.
VALUE OF THIS DRAWING: $500.00

SIGN & FAX BACK SO THAT WE MAY APPROVE YOUR ORDER.
FAX: 865.947.2089 info@signco-inc.com

☐ APPROVED
☐ APPROVED W/CHANGES
☐ REVISE & RESUBMIT

APPROVAL SIGNATURE

FILE LOCATION:	SALES REPRESENTATIVE:	DATE:	SCALE:
Keith/F/Farragut Center	Keith Pankey	10-11-2024	1/4" = 1'
LOCATION: Knoxville, TN	FILE: Farragut Center His Security Bldg	DRAWN BY: Tiffany Poling	

256.25”

144.25”

43”

21’-0”

FRONT ELEVATION - PROPOSED

FRONT ELEVATION - EXISTING

TOP DOWN VIEW

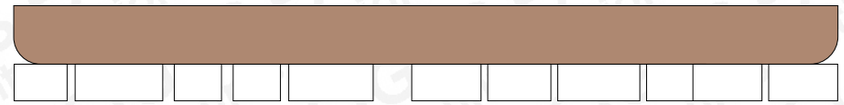

112.57”

12”

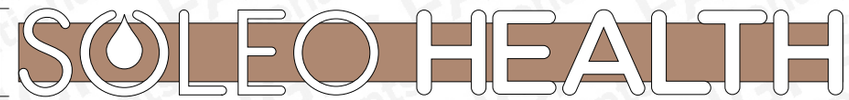

ILLUMINATED CHANNEL LETTERS ON RACEWAY

- QTY. 1

LETTERS

- FACE IS FLAT 3/16” #2447 WHITE ACRYLIC
- 1” BLACK TRIM CAP
- 5” RETURNS .040” ALUM. PAINTED BLACK

ELECTRICAL & MOUNTING

- RADIUSED RACEWAY COLOR TO MATCH ***SW 2804 RENWICK ROSE BEIGE***
- RACEWAY EQUIPPED w/ EXTERNAL SERVICE SWITCH
- WHITE LED ILLUMINATION w/ ELECTRONIC POWER SOURCE
- REQUIRES U.L. AND MANUFACTURER’S LABELS
- DEDICATED CIRCUIT IS REQUIRED FOR ILLUMINATED SIGNS
- WIRE NUTS ARE REQUIRED ON ALL ILLUMINATED SIGNS
- POWER PROVIDED BY ELECTRICIAN AND CONNECTED IF WITHIN 6’ OF THE SIGN
- INSTALL AS SHOWN

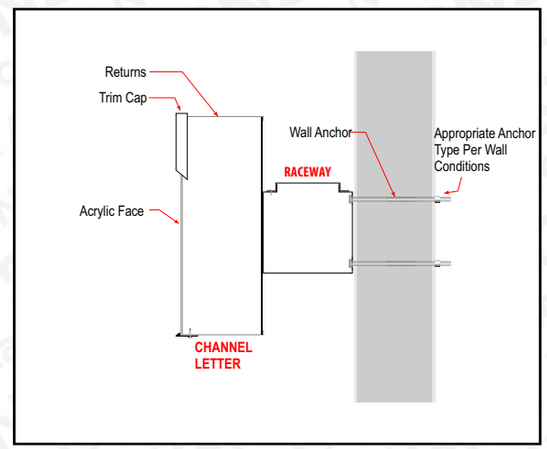

Unlit Channel Letter - Raceway Mounted

LANDLORD OR AGENT SIGNATURE HERE

Please sign & return drawing/s to FASTSIGNS
Signature below indicates approval of BOTH design & placement of sign/s

X _____ DATE _____

DRAWING IS NOT TO SCALE BUT IS PROPORTIONATE

FIELD VERIFY ALL MEASUREMENTS BEFORE BEGINNING ANY WORK.
INSTALLER TO VERIFY MOUNTING SURFACE PRIOR TO INSTALLATION.

FASTSIGNS NATIONAL ACCOUNTS

ACCOUNT: **SOLEO HEALTH**

FILE: **251590-2-ART1**

REPRESENTATIVE: Jennifer Sutton

ADDRESS: 11115 Kingston Pike
Knoxville TN 37934

ORIGINAL DRAWING DATE: 11/06/24

SCALE: NTS

REV. #1 BY: | REV. DATE

REVISION NOTES:

REV. #2 BY: | REV. DATE

REVISION NOTES:

REV. #3 BY: | REV. DATE

REVISION NOTES:

Town of Farragut
Sign Permit
BP-2024-803-SP
Approved, 12/5/24

DRAWN BY: J.Lazo

REVISED BY:

THIS DRAWING IS THE PROPERTY OF FASTSIGNS INTERNATIONAL, INC. THE BORROWER AGREES, IT SHALL NOT BE REPRODUCED, COPIED OR DISPOSED OF, DIRECTLY OR INDIRECTLY, NOR USED FOR ANY PURPOSE WITHOUT

Town of Farragut
Sign Permit
BP-2024-786-SP
Approved, 12/5/24

Allstate Blue

Vinyl
Avery, Cobalt Blue,
UC 900-686-T
Arlon, Sultan Blue, 157

Paint
AkzoNobel 482B4

All paint to be satin finish

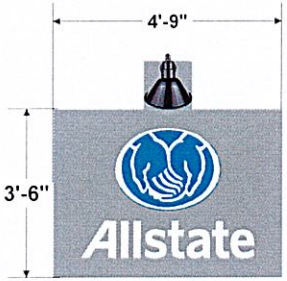

GOOSENECK LIGHT FIXTURES
USE SATCO S28737
4000K - WARM WHITE
SETTING ON LED BULBS

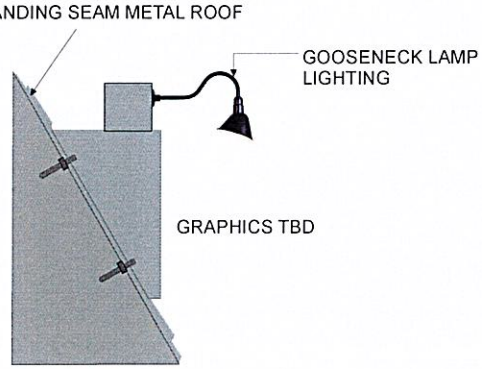

SIGNCO inc.
PLASTIC.NEON.ELECTRONIC

This drawing is the property of SIGNCO, Inc. & to be used for contractual purposes between the customer & SIGNCO, Inc. only. Unauthorized use of this information will result in claims up to 1/3 value of the job represented on this drawing.
VALUE OF THIS DRAWING: $500.00

SIGN & FAX BACK SO THAT
WE MAY APPROVE YOUR ORDER.
FAX: 865.947.2089 info@signco-inc.com

☐ APPROVED
☐ APPROVED W/CHANGES
☐ REVISE & RESUBMIT

APPROVAL SIGNATURE

FILE LOCATION: Keith/F/Farragut Center	SALES REPRESENTATIVE: Keith Pankey	DATE: 11-08-2024	SCALE: 1/4" = 1'
LOCATION: Knoxville, TN	FILE: Farragut Center Bldg Allstate	DRAWN BY: Tiffany Poling	

Size: **52" x 111" x 4"** Material: **.5" Acrylic/ LEDs/ .090 Aluminum** Quantity: **1** Comments: **single sided** Work Order #: **49162BB**

○ Digital print ○ Vinyl ● Other **File Location:** 24_Y-12 Federal Credit Union_Farragut Sign Package_49162BB

CUS-SIGN | **SIGN #2B - EAST**

INSTALLATION **ILLUMINATED**

Town of Farragut
Sign Permit
BP-2024-780-SP
Approved 11/27/24

EXAMPLE OF PUSH THRU ACRYLIC

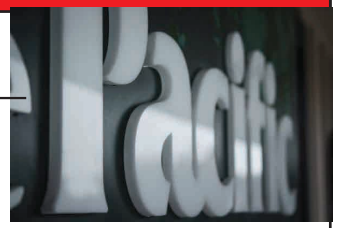

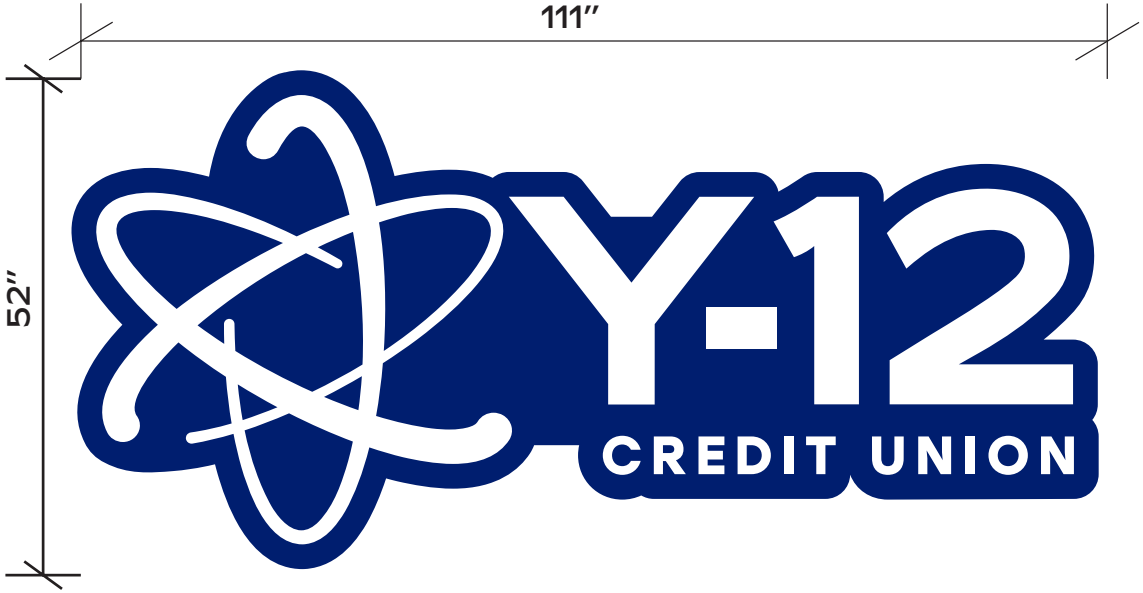

SIDE VIEW

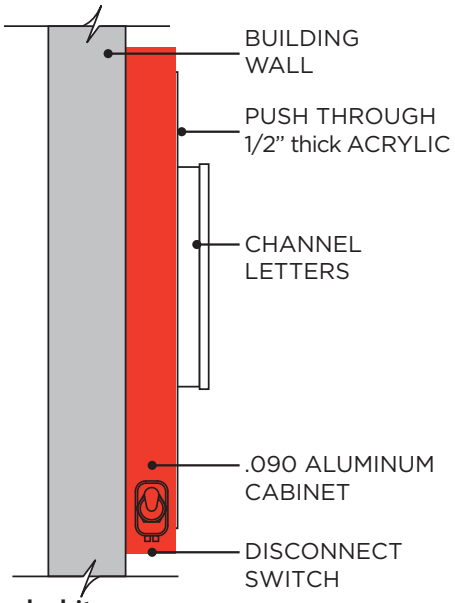

CUS-SIGN: ***Sign #2B- East:*** 1qty - 52" x 111" x 4" deep .090 Aluminum - LED illuminated sign with routed .090 aluminum cabinet and white *clear acrylic with white translucent vinyl push thru* logo & "credit union", Face lit channel letters "Y-12" - alum. cabinet face painted ***PMS 662C Indigo*** - returns painted ***PMS 3516C Paprika***

INSTALLATION: Installation of all signs - ***ground sign installed onto existing pole. Pending engineering. Additional cost for new steel and footer*** Federal Certified & Licensed Crane/ CDL operators as required by Federal Law 1926.1427

Removal: removing and disposing of ground sign & flat cut letters on south wall - installing channel letters in place

PMS 662C	PMS 3516C	WHITE

SHOWN SQ FT OF SIGN #2 B EAST: 40.08 SQ. FT
SQ FT ALLOWED: 40.13SQ. FT FOR MONUMENT

Design	OT	OT	MGMT.	MGMT.	Print/Cut	Print/Cut	App.	App.	QC	MGMT.	Route	Route	Plastic	Plastic	Metal	Metal	Paint	Paint	Assem.	Assem.	QC	QC	Crating

*By initialing here you confirm not only that the previous step is up to ASC quality standards, but also our part is complete and up to ASC quality standards & is ready to proceed.

Client: Y-12 Federal Credit Union
Ph/Email: mark24083@y12fcu.org
Title: ***LOCATION: Farragut Location***

Date: 11-19-24 Price: $ ***- Job Total***
Designer: Grace Hammond Rev: E Page: 6 of 8
Approved By: Date:

ALLEN SIGN CO. SOUTH
865 573-3524
2408 CHAPMAN HWY
FAX 579-0356

This is an original unpublished drawing created by Allen Sign Co. It is for your **personal use only**. It is **not** to be **shown outside your organization, reproduced, copied, or exhibited without written consent of Allen Sign Co.** **Failure to obtain consent for use other than by Allen Sign Co. will result in a $300 fee for the art.**

Size: **52" x 111" x 4"** Material: **.5" Acrylic/ LEDs/ .090 Aluminum** Quantity: **1** Comments: **single sided** Work Order #: **49162BB**

○ Digital print ○ Vinyl ● Other **File Location:** 24_Y-12 Federal Credit Union_Farragut Sign Package_49162BB

CUS-SIGN **SIGN #2B - EAST**

INSTALLATION ILLUMINATED

SHOWN SQ FT OF SIGN #2 B EAST: 40.08 SQ. FT
SQ FT ALLOWED: 40.13 SQ. FT

Town of Farragut
Sign Permit
BP-2024-780-SP
Approved 11/27/24

LOW VOLTAGE L.E.D. LIGHTING SYSTEM

U.L. LISTED CLASS 2 - CONFORMS TO U.L. 48 & NEC 600 CODE

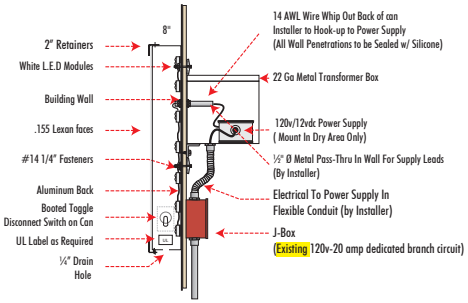

SECTION DETAIL - LED ILLUMINATED WALL LOGO/CABINET
N.T.S.

Design	OT	OT	MGMT.	MGMT.	Print/Cut	Print/Cut	App.	App.	QC

MGMT.	Route	Route	Plastic	Plastic	Metal	Metal	Paint	Paint	Assem.	Assem.	QC	QC	Crating

*By initialing here you confirm not only that the previous step is up to ASC quality standards, but also our part is complete and up to ASC quality standards & is ready to proceed.

Client: Y-12 Federal Credit Union
Ph/Email: mark24083@y12fcu.org
Title: ***LOCATION: Farragut Location***

Date: 11-19-24 Price: $ ***- Job Total***
Designer: Grace Hammond Rev: E Page: 7 of 8
Approved By: Date:

ALLEN SIGN CO SOUTH
855 573-3524
2408 CHAPMAN HWY
FAX 579-0356

This is an original unpublished drawing created by Allen Sign Co. It is for your **personal use only**. It is **not** to be **shown outside your organization, reproduced, copied, or exhibited without written consent of Allen Sign Co.** **Failure to obtain consent for use other than by Allen Sign Co. will result in a $300 fee for the art.**

Yum! Brands

	QTY.	DESCRIPTION	SQ. FT.
A	1	MEDIUM SWINGING BELL	9.9
B	1	12" WHITE LETTER SET	7.3
P1	2	MONUMENT REPL. FACES & ADDRESS NUMERALS	
F	1	DRIVE THRU CLEARANCE BAR	
G	1	DRIVE THRU OCU	
H	1	DRIVE THRU MENUBOARD	

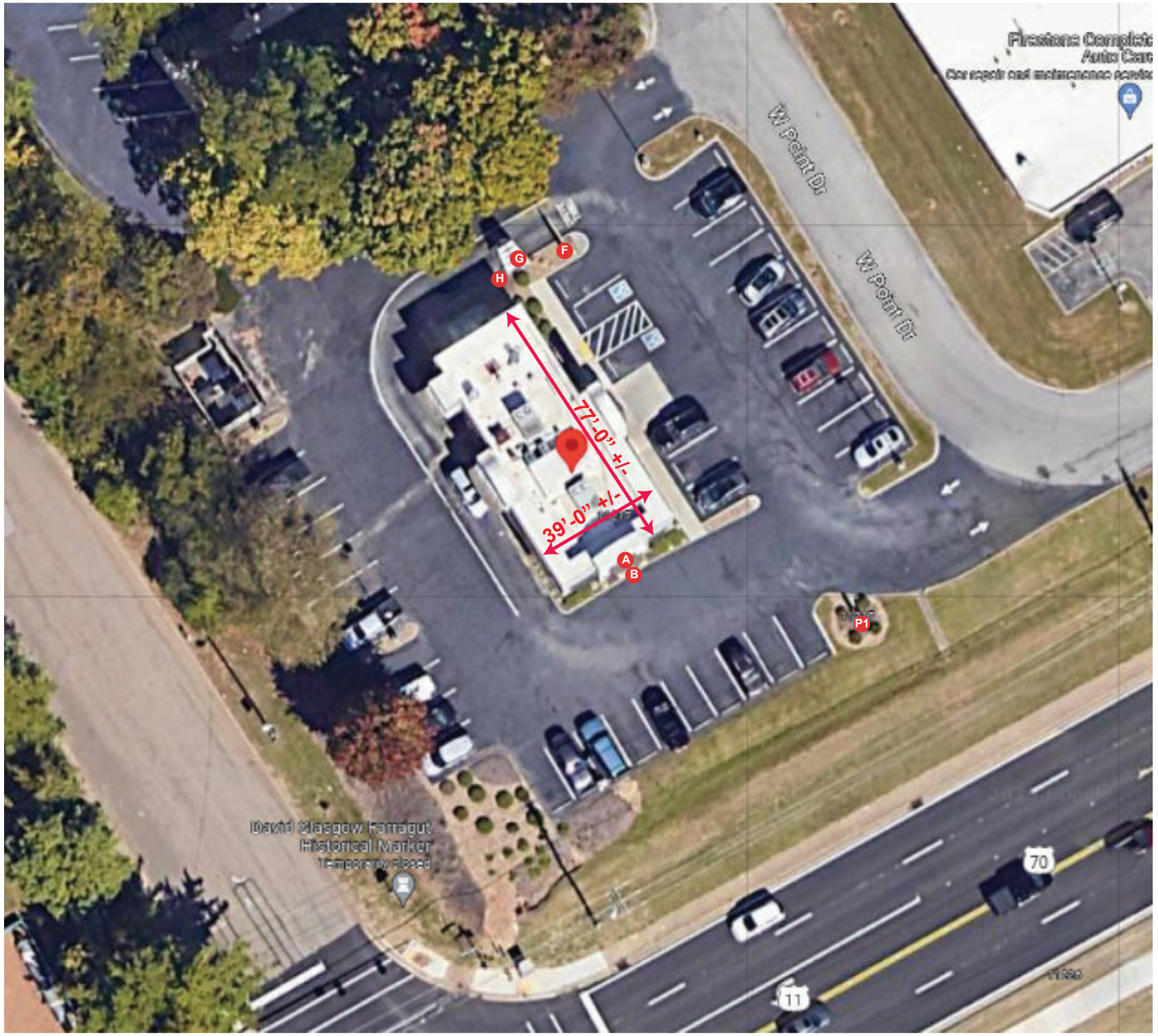

Town of Farragut
Sign Permit
BP-2024-768-SP
Approved, 12/3/2024

TACO BELL
11217 KINGSTON PIKE
KNOXVILLE, TN

CUMMINGS
Customer creation through brand innovation.

THIS DESIGN REMAINS OUR EXCLUSIVE PROPERTY AND CANNOT BE DUPLICATED WITHOUT WRITTEN CONSENT

THIS IS AN ORIGINAL UNPUBLISHED DRAWING CREATED FOR YOUR PERSONAL USE IN CONNECTION WITH A PROJECT PLANNED FOR YOU BY CUMMINGS SIGNS. IT IS NOT TO BE SHOWN OUTSIDE YOUR ORGANIZATION NOR USED, REPRODUCED, COPIED, OR EXHIBITED IN ANY FASHION UNLESS AUTHORIZED IN WRITING BY AN OFFICER OF CUMMINGS SIGNS.

CUSTOMER APPROVAL: _____

DATE: _____

	DATE	BY		DATE	BY
Rev. #1			Rev. #4		
Rev. #2			Rev. #5		
Rev. #3			Rev. #6		

TACO BELL

DRAWING NO: 1033155140.09

DATE: 11.5.2024

S. Hawke

Yum! Brands

	QTY.	DESCRIPTION	SQ. FT.
A	1	MEDIUM SWINGING BELL	9.9
B	1	12" WHITE LETTER SET	7.3
P1	2	MONUMENT REPL. FACES & ADDRESS NUMERALS	
F	1	DRIVE THRU CLEARANCE BAR	
G	1	DRIVE THRU OCU	
H	1	DRIVE THRU MENUBOARD	

Town of Farragut
Sign Permit
BP-2024-768-SP
Approved, 12/3/2024

FRONT ELEVATION
EXISTING

FRONT ELEVATION
PROPOSED

TACO BELL
DOTTED LINE REPRESENTS 32.5 SQ. FT.

NOTE: UPLIGHTING REQUIRED FOR NON-ILLUMINATED LOGO & LETTER SET.
UPLIGHTING SPECS. INCLUDED

nighttime view

As part of this permit, this light cannot exceed 4000k. In addition, the light must be mounted, directed, and shielded to eliminate glare and light spill.

TACO BELL
11217 KINGSTON PIKE
KNOXVILLE, TN

CUMMINGS
Customer creation through brand innovation.

THIS DESIGN REMAINS OUR EXCLUSIVE PROPERTY AND CANNOT BE DUPLICATED WITHOUT WRITTEN CONSENT

THIS IS AN ORIGINAL UNPUBLISHED DRAWING CREATED FOR YOUR PERSONAL USE IN CONNECTION WITH A PROJECT PLANNED FOR YOU BY CUMMINGS SIGNS. IT IS NOT TO BE SHOWN OUTSIDE YOUR ORGANIZATION NOR USED, REPRODUCED, COPIED, OR EXHIBITED IN ANY FASHION UNLESS AUTHORIZED IN WRITING BY AN OFFICER OF CUMMINGS SIGNS.

CUSTOMER APPROVAL: _____

DATE: _____

	DATE	BY		DATE	BY
Rev. #1			Rev. #4		
Rev. #2			Rev. #5		
Rev. #3			Rev. #6		

TACO BELL

DRAWING NO:
1033155140.09

DATE: 11.5.2024

S. Hawke

Yum! Brands

NON-ILLUMINATED Medium Swinging Bell

A

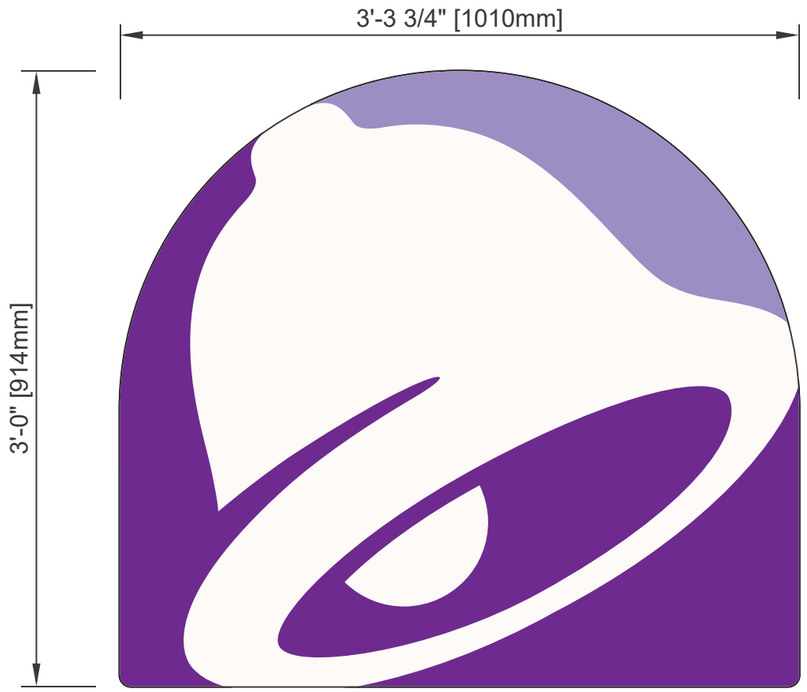

FRONT VIEW

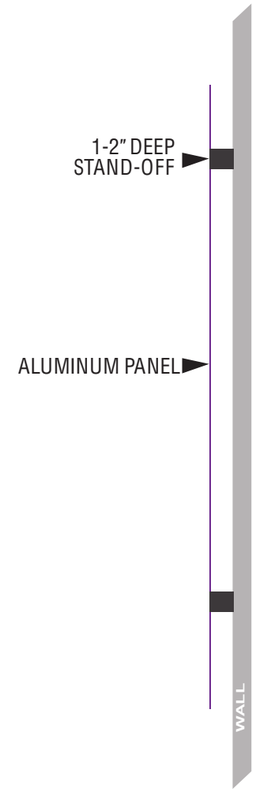

END VIEW

SPECIFICATIONS

.090 FLAT ALUMINUM FACE WITH VINYL GRAPHICS ON THE FACE. 2" STANDOFFS ON THE BACK FOR WALL INSTALLATION.

Area

- Squared: 9.94 sf
- Actual: 8.76 sf

GRAPHIC & COLOR SPECIFICATIONS:

	COLOR	PANTONE	3M VINYL	PAINT
1	Dark Purple	PMS 2603C	3M 3630-9327	
2	Light Purple	PMS 2577C	3M 3630-9141	
4	White	Pantone White	3M 3630-20	SW2123

Town of Farragut
Sign Permit
BP-2024-768-SP
Approved, 12/3/2024

CUMMINGS

THIS DESIGN REMAINS OUR EXCLUSIVE PROPERTY AND CANNOT BE DUPLICATED WITHOUT WRITTEN CONSENT

THIS IS AN ORIGINAL UNPUBLISHED DRAWING CREATED FOR YOUR PERSONAL USE IN CONNECTION WITH A PROJECT PLANNED FOR YOU BY CUMMINGS SIGNS. IT IS NOT TO BE SHOWN OUTSIDE YOUR ORGANIZATION NOR USED, REPRODUCED, COPIED, OR EXHIBITED IN ANY FASHION UNLESS AUTHORIZED IN WRITING BY AN OFFICER OF CUMMINGS SIGNS.

CUSTOMER APPROVAL: _____

DATE: _____

	DATE	BY		DATE	BY
Rev. #1			Rev. #4		
Rev. #2			Rev. #5		
Rev. #3			Rev. #6		

TACO BELL

DRAWING NO: 1033155140.10A

DATE: 11.21.2024

S. Hawke

B

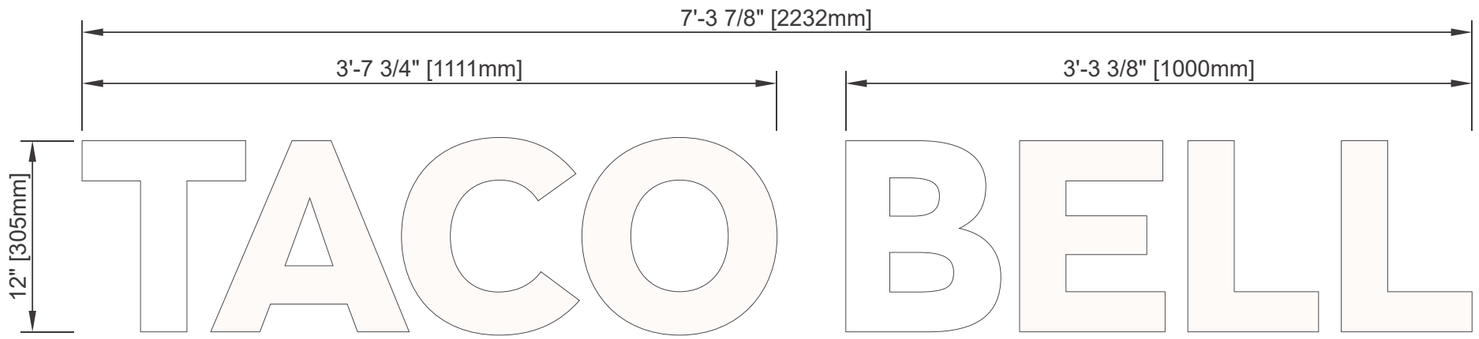

FRONT VIEW

SPECIFICATIONS

DESIGN PARAMETERS

- **Structural adequacy shall be the manufacturer's responsibility using the following criteria:**
- 100 MPH 3 second gust wind speed per ASCE 7-05 (130 MPH - ASCE 7-10). Category II, Exposure C. Components & Cladding, Zone 5.
- Attachment may vary based on wall conditions.
- Compliant with national building codes and standards (IBC 2009, IBC 2015, AISC 14th Edition, ASCE 7-05, ASCE 7-10, ACI & Aluminum Design Manual).
- Refer to written documentation for material specifications.

Materials

- Cabinet: .040 [1mm] aluminum returns w/ black finish and .063 aluminum back
- 3/4" [19mm] black trim cap
- Face: .150 [4mm] 7328 white acrylic
- Removable face

Area

- Squared: 7.32 sf

GRAPHIC & COLOR SPECIFICATIONS:

	COLOR	PANTONE	3M VINYL	PAINT
1	Dark Purple	PMS 2603C	3M 3630-9327	
2	Light Purple	PMS 2577C	3M 3630-9141	
3	Black	Pantone Black		
4	White	Pantone White	3M 3630-20	SW2123
5	TB Bronze Tiger	Drylac 49/66230 C33		
6	Statuary Bronze	Drylac 38/60080		Status Bronze - SW7034
7	Urbane Bronze			SW7048

Town of Farragut
Sign Permit
BP-2024-768-SP
Approved, 12/3/2024

NOTE: THIS IS A NON-ILLUMINATED LETTER SET

TYPICAL WALL SECTION FOR INTERIOR APPLICATION

TYPICAL WALL SECTION FOR EXTERIOR APPLICATION

N.T.S.

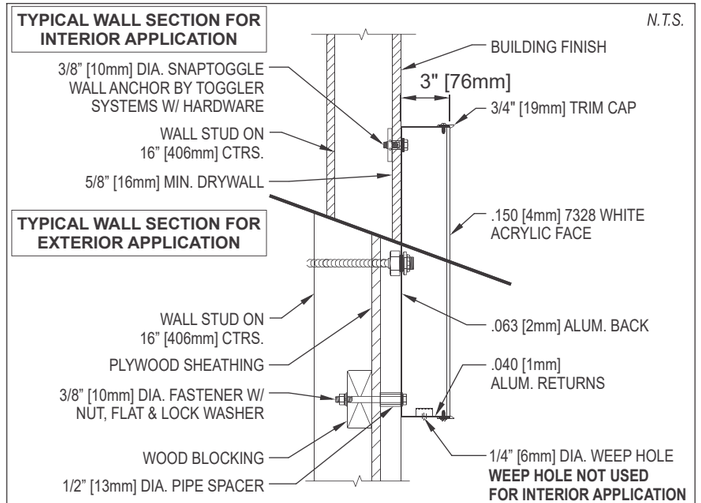

SEAL ALL WALL PENETRATIONS TO PREVENT WATER INTRUSION AS FOLLOWS: INSTALL BUSHING AFTER E.I.F.S. APPLICATION HAS HARDENED. DRILL HOLE SLIGHTLY LARGER THAN BUSHING THROUGH INSULATION ONLY. STOP AT PLYWOOD. CAULK OPENING PRIOR TO INSERTING FASTENER TO SEAL PENETRATION.

UPLIGHTING FOR NON-ILLUMINATED LETTER SET.
LIGHTING TO BE INSTALLED ONTO EXISTING CANOPY

Town of Farragut
Sign Permit
BP-2024-768-SP
Approved, 12/3/2024

As part of this permit, this light cannot exceed 4000k. In addition, the light must be mounted, directed, and shielded to eliminate glare and light spill.

SINCE 1945 KEYSTONE LIGHT MADE EASY | XFiT | COLOR SELECT

KT-FLED35-R1A-UNV-8CSB-VDIM
COMPACT 35W GENERAL-PURPOSE LED FLOODLIGHT

DESCRIPTION

Compact 35W General-Purpose LED Floodlight | 120–277V Input | 3000–5000K | Bronze Housing | Multiple Mounting Options

APPLICATION

Building or ground mount application for outdoor illumination (landscapes, display signage, loading docks, building façades, pathways, parking areas, and other general site lighting requirements)

UL CERTIFIED | DLC LISTED PREMIUM | TAA COMPLIANT | TRUSTED N3 WARRANTY | 10 YEAR LIMITED WARRANTY

PERFORMANCE SPECIFICATIONS

Catalog Number	Wattage	Selectable CCT*	Lumens	Efficacy	Input Voltage	Housing Color	Optics Type	DLC	CRI	Metal Halide Equivalent
KT-FLED35-R1A-UNV-8CSB-VDIM	35W	3000K	4480 lm	128 lm/W	120–277V	Bronze	7H x 7V	Yes	>80	150–175W MH
		4000K	5075 lm	145 lm/W						
		5000K	5350 lm	153 lm/W						

Not permitted to exceed 4000K

*Color Uniformity: CCT (Correlated Color Temperature) range as per guidelines outlined in ANSI C78.377-2017

PHYSICAL SPECIFICATIONS

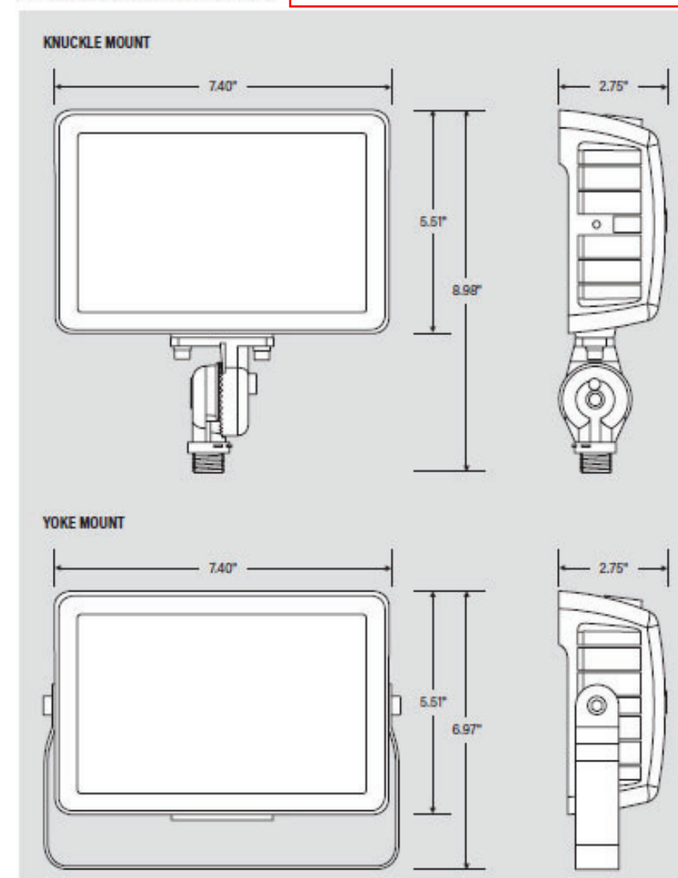

	EPA
Mounted Vertical	0.34 sq/ft
Mounted Horizontal	0.17 sq/ft
Mounted 45°	0.36 sq/ft

Size: 9" x 117" | Material: Acrylic/Vinyl | Quantity: 1 | Comments: | Work Order #: 48836CS

○ Digital print ● Vinyl ● Other | file location: 24/A/Apotheca/48836CS Kingston Pike

ILLUMINATED

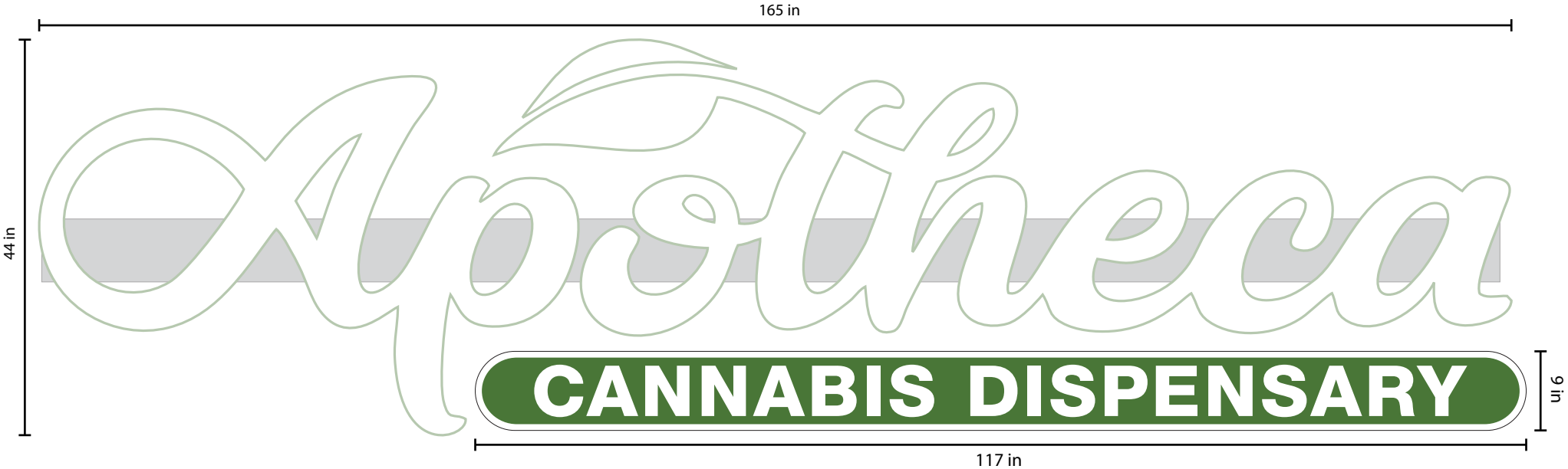

1 qty - 9" x 117" White translucent acrylic with digital print green translucent vinyl overlay (CANNABIS DISPENSARY).

Town of Farragut
Sign Permit SP-2024-744-SP
Approved 11.08.2024

PMS 364

Design	OT	OT	MGMT.	MGMT.	Print/Cut	Print/Cut	App.	App.	QC	MGMT.	Route	Route	Plastic	Plastic	Metal	Metal	Paint	Paint	Assem.	Assem.	QC	QC	Crating

*By initialing here you confirm not only that the previous step is up to ASC quality standards, but also our part is complete and up to ASC quality standards & is ready to proceed.

Client: Apotheca | Date: 8-20-24 | Price: $ 590.00 **job total**

Ph/Email: allsafechimney@icloud.com, construction@apothica.org | Designer: Josh Baker | Rev: A | Page: 1 of 3

Title: Kingston Pike | Approved By: | Date:

ALLEN SIGN CO. SOUTH 1965 573-3524 2408 CHAPMAN HWY. FAX 579-0356

This is an original unpublished drawing created by Allen Sign Co. It is for your **personal use only**. It is **not** to be **shown outside your organization, reproduced, copied, or exhibited without written consent of Allen Sign Co.** **Failure to obtain consent for use other than by Allen Sign Co. will result in a $300 fee for the art.**

Size: 9" x 117" | Material: Acrylic/Vinyl | Quantity: 1 | Comments: | Work Order #: 48836CS

○ Digital print ● Vinyl ● Other | file location: 24/A/Apotheca/48836CS Kingston Pike

ILLUMINATED

PMS 364

Design	OT	OT	MGMT.	MGMT.	Print/Cut	Print/Cut	App.	App.	QC	MGMT.	Route	Route	Plastic	Plastic	Metal	Metal	Paint	Paint	Assem.	Assem.	QC	QC	Crating

*By initialing here you confirm not only that the previous step is up to ASC quality standards, but also our part is complete and up to ASC quality standards & is ready to proceed.

Client: Apotheca | Date: 8-20-24 | Price: $ 590.00 **job total**

Ph/Email: allsafechimney@icloud.com, construction@apothica.org | Designer: Josh Baker | Rev: A | Page: 2 of 3

Title: Kingston Pike | Approved By: | Date:

ALLEN SIGN CO. SOUTH
1865
573-3524
2408 CHAPMAN HWY.
FAX 579-0356

This is an original unpublished drawing created by Allen Sign Co. It is for your **personal use only**. It is **not** to be **shown outside your organization, reproduced, copied, or exhibited without written consent of Allen Sign Co.** **Failure to obtain consent for use other than by Allen Sign Co. will result in a $300 fee for the art.**

Size: 9" x 117" | Material: Acrylic/Vinyl | Quantity: 1 | Comments: | Work Order #: 48836CS

○ Digital print ● Vinyl ● Other | file location: 24/A/Apotheca/48836CS Kingston Pike

ILLUMINATED

PMS 364

Design	OT	OT	MGMT.	MGMT.	Print/Cut	Print/Cut	App.	App.	QC	MGMT.	Route	Route	Plastic	Plastic	Metal	Metal	Paint	Paint	Assem.	Assem.	QC	QC	Crating

*By initialing here you confirm not only that the previous step is up to ASC quality standards, but also our part is complete and up to ASC quality standards & is ready to proceed.

Client: Apotheca | Date: 8-20-24 | Price: $ 590.00 **job total**

Ph/Email: allsafechimney@icloud.com, construction@apothica.org | Designer: Josh Baker | Rev: A | Page: 3 of 3

Title: Kingston Pike | Approved By: | Date:

ALLEN SIGN CO. SOUTH
1965 573-3524
2408 CHAPMAN HWY.
FAX 579-0356

This is an original unpublished drawing created by Allen Sign Co. It is for your **personal use only**. It is **not** to be **shown outside your organization, reproduced, copied, or exhibited without written consent of Allen Sign Co.** **Failure to obtain consent for use other than by Allen Sign Co. will result in a $300 fee for the art.**

Town of Farragut
Sign Permit BP-2024-729-SP
Approved 10.21.2024

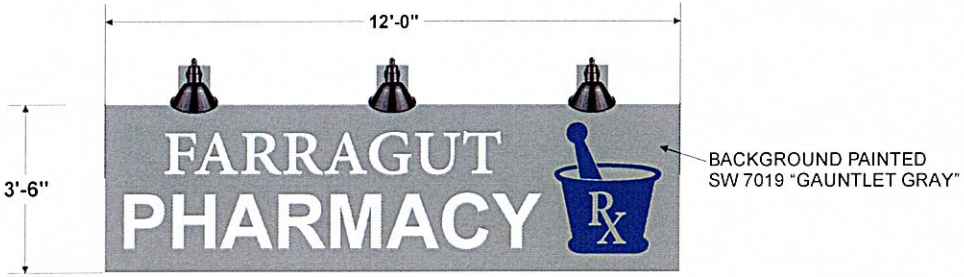

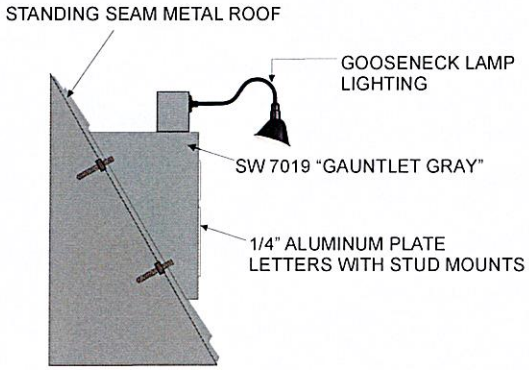

SIDE VIEW

GOOSENECK LIGHT FIXTURES
USE SATCO S28737
4000K - WARM WHITE
SETTING ON LED BULBS

Reflex Blue

SIGNCO inc.
PLASTIC.NEON.ELECTRONIC

This drawing is the property of SIGNCO, Inc. & to be used for contractual purposes between the customer & SIGNCO, Inc. only. Unauthorized use of this information will result in claims up to 1/3 value of the job represented on this drawing.
VALUE OF THIS DRAWING: $500.00

SIGN & FAX BACK SO THAT
WE MAY APPROVE YOUR ORDER.
FAX: 865.947.2089 info@signco-inc.com

☐ APPROVED
☐ APPROVED W/CHANGES
☐ REVISE & RESUBMIT

APPROVAL SIGNATURE

FILE LOCATION:	SALES REPRESENTATIVE:	DATE:	SCALE:
Keith/F/Farragut Center	Keith Pankey	08-27-2024	1/4" = 1'
LOCATION:	FILE:	DRAWN BY:	
Knoxville, TN	Farragut Center Farragut Pharmacy	Tiffany Poling	

Town of Farragut
Sign Permit BP-2024 -623-SP
Approved 11.08.2024

1) 105.74" W 34"T Channel letter set
5" deep Returns Painted White
Mounted to raceway painted SW 7688
3/16" White Translucent Acrylic Face White Trimcap
Orange LED Illumination (Back)
White led Illumoination (Front)
SNS to Install on Building front 117 Lovell Road

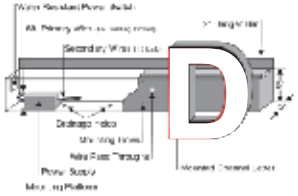

RACEWAY FRONT VIEW

DAY VIEW NIGHT VIEW

FRONT VIEW

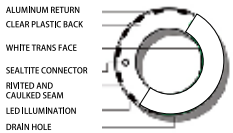

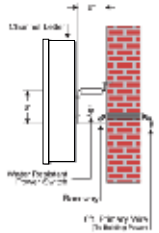

RACEWAY SIDE VIEW

Racway Mounts
With Masonry Anchors
and Bolts To Fascia
(Cobra Anchors 252S
Lag Shield, 220 lb, Zinc)

25 SF ALLOWED- 24.97 SF PROPOSED

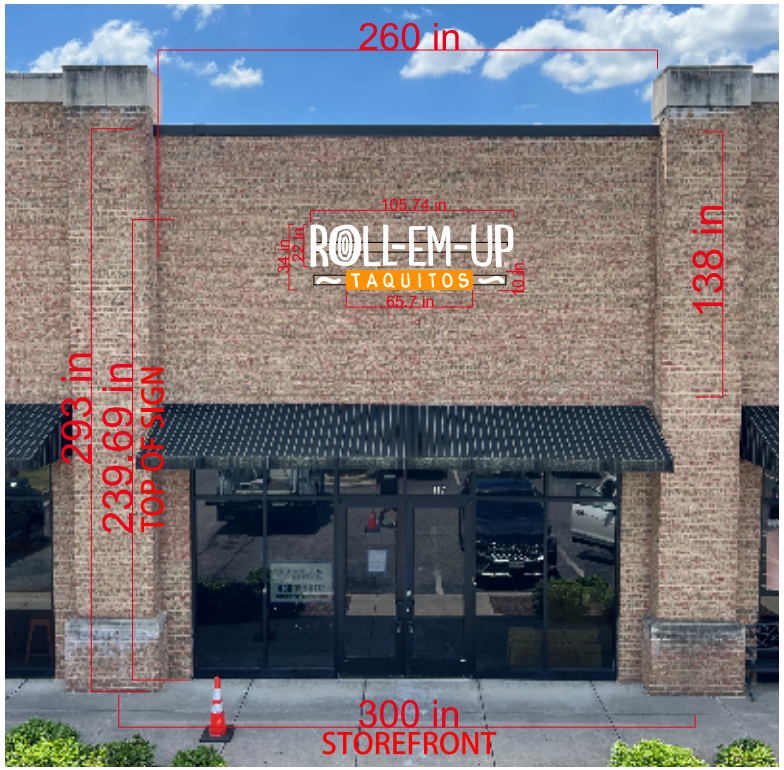

20 YEARS
SNS
est.2004

10932 Murdock Rd.
Knoxville, TN 37932
(865) 671-8788
FAX (865) 671-8787
www.signsnsuch.net

This design/drawing is the property of SIGNS-N-SUCH and cannot be used or distributed without the approval of said company.

DATE:	07-16-2024
LOCATION:	Knoxville Roll EM Up Lovell
SALES REP:	C. Hutchison
DRAWN BY:	A. Matthews
PAGE:	(1) of (2)

AVERAGE CONSTRUCTION TIMES AFTER PERMIT IS APPROVED IS 15-20 BUSINESS DAYS. SIGN CONSTRUCTION CAN NOT BEGIN UNTIL PERMIT IS APPROVED.

Approved By: _____

Date: _____

*Production will not begin until you approve your proof. Please verify wording, spelling, art and sizes are correct before approving. Please note, once approved that you will be responsible for remake costs should any errors be found after production begins. Colors portrayed on this proof may differ from final product due to most monitors not being color calibrated. There is no charge for the first proof, however any changes beyond the second proof may be subject to set up / desktop fees. Thank you!

SIGNS N SUCH
signs. banners. wraps. shirts.

Town of Farragut
Sign Permit BP-2024-704-SP
Approved 11.08.2024

LED halo-lighted reverse channel letters on oversized aluminum raceway

SIDE VIEW

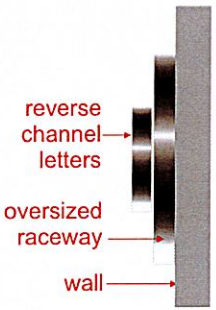

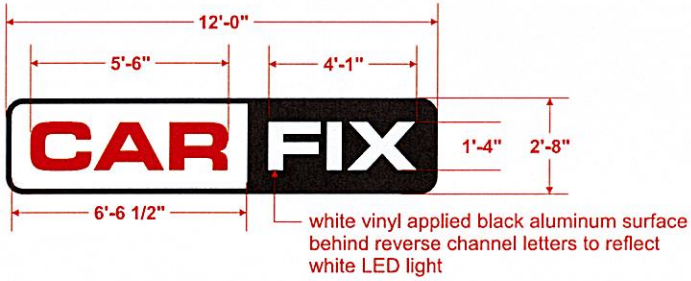

NIGHT VIEW

REVERSE CHANNEL LETTERS
L.E.D. ILLUMINATION

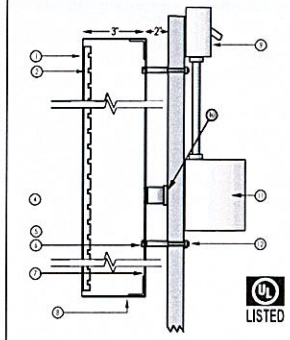

1. .080 ALUMINUM FACE
2. WHITE LED STRIP LIGHTING
6. 1/4" ALUMINUM SPACERS
7. CLEAR LEXAN BACK
8. .063 ALUMINUM SIDEWALLS
9. DISCONNECT SWITCH
10. SEAL TIGHT PASS-THROUGH WIRING KIT
11. 30 ma TRANSFORMERS
12. 2" STAND-OFFS

SIGN & FAX BACK SO THAT WE MAY APPROVE YOUR ORDER.
FAX: 865.947.2089 info@signco-inc.com

☐ APPROVED
☐ APPROVED W/CHANGES
☐ REVISE & RESUBMIT

APPROVAL SIGNATURE

FILE LOCATION: Keith/C/CARFIX
SALES REPRESENTATIVE: Keith Pankey
DATE: 09-12-2024
SCALE: 1/4" = 1'
LOCATION: Knoxville, TN
FILE: CARFIX Bldf Farragut 2
DRAWN BY: Tiffany Poling

SIGNCO inc.
PLASTIC.NEON.ELECTRONIC

This drawing is the property of SIGNCO, Inc. & to be used for contractual purposes between the customer & SIGNCO, Inc. only. Unauthorized use of this information will result in claims up to 1/3 value of the job represented on this drawing.
VALUE OF THIS DRAWING: $500.00

landscaped with boxwood shrubs and monkey grass

black

Pantone 2347 c

SIGN & FAX BACK SO THAT WE MAY APPROVE YOUR ORDER.

FAX: 865.947.2089 info@signco-inc.com

☐ APPROVED
☐ APPROVED W/CHANGES
☐ REVISE & RESUBMIT

APPROVAL SIGNATURE

FILE LOCATION: Keith/C/CARFIX

SALES REPRESENTATIVE: Keith Pankey

DATE: 12-03-2024

SCALE: 1/4" = 1'

LOCATION: Knoxville, TN

FILE: CARFIX Monument Farragut 2

DRAWN BY: Tiffany Poling

SIGNCO inc.
PLASTIC.NEON.ELECTRONIC

This drawing is the property of SIGNCO, Inc. & to be used for contractual purposes between the customer & SIGNCO, Inc. only. Unauthorized use of this information will result in claims up to 1/3 value of the job represented on this drawing.
VALUE OF THIS DRAWING: $500.00

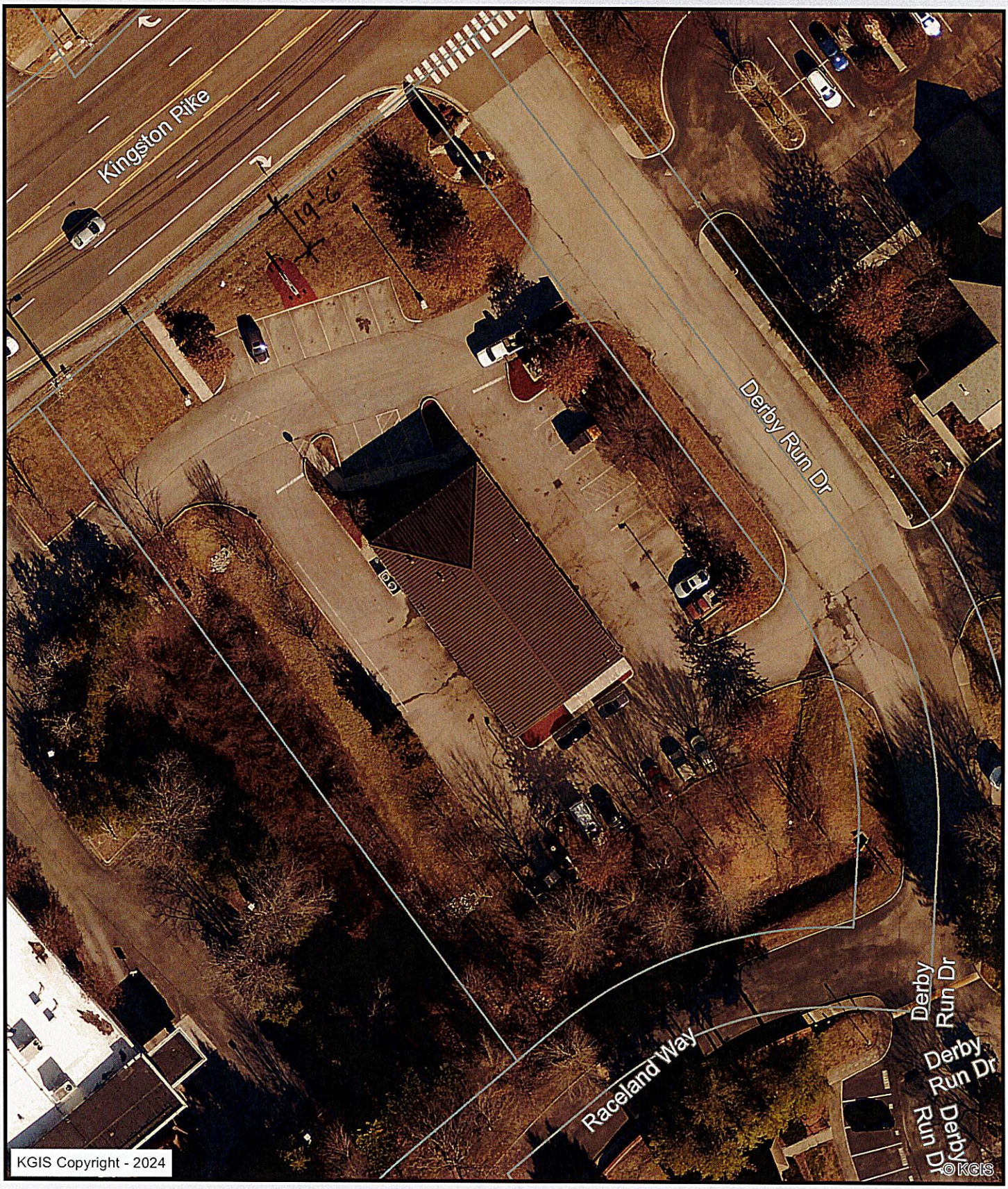

19'-6" SETBACK FROM P.LINE

11926 Kinston Pike

CARFIX

Knoxville - Knox County - KUB Geographic Information System

Printed: 12/3/2024 at 1:26:54 PM

0 25 50 100

ft

KGIS makes no representation or warranty as to the accuracy of his map and its information nor to its fitness for use. Any user of this map product accepts the same AS IS ,WITH ALL FAULTS, and assumes all responsibility for the use thereof, and futher covenants and agrees to hold KGIS harmless from any and all damage, loss, or liability arising from any use of this map product.

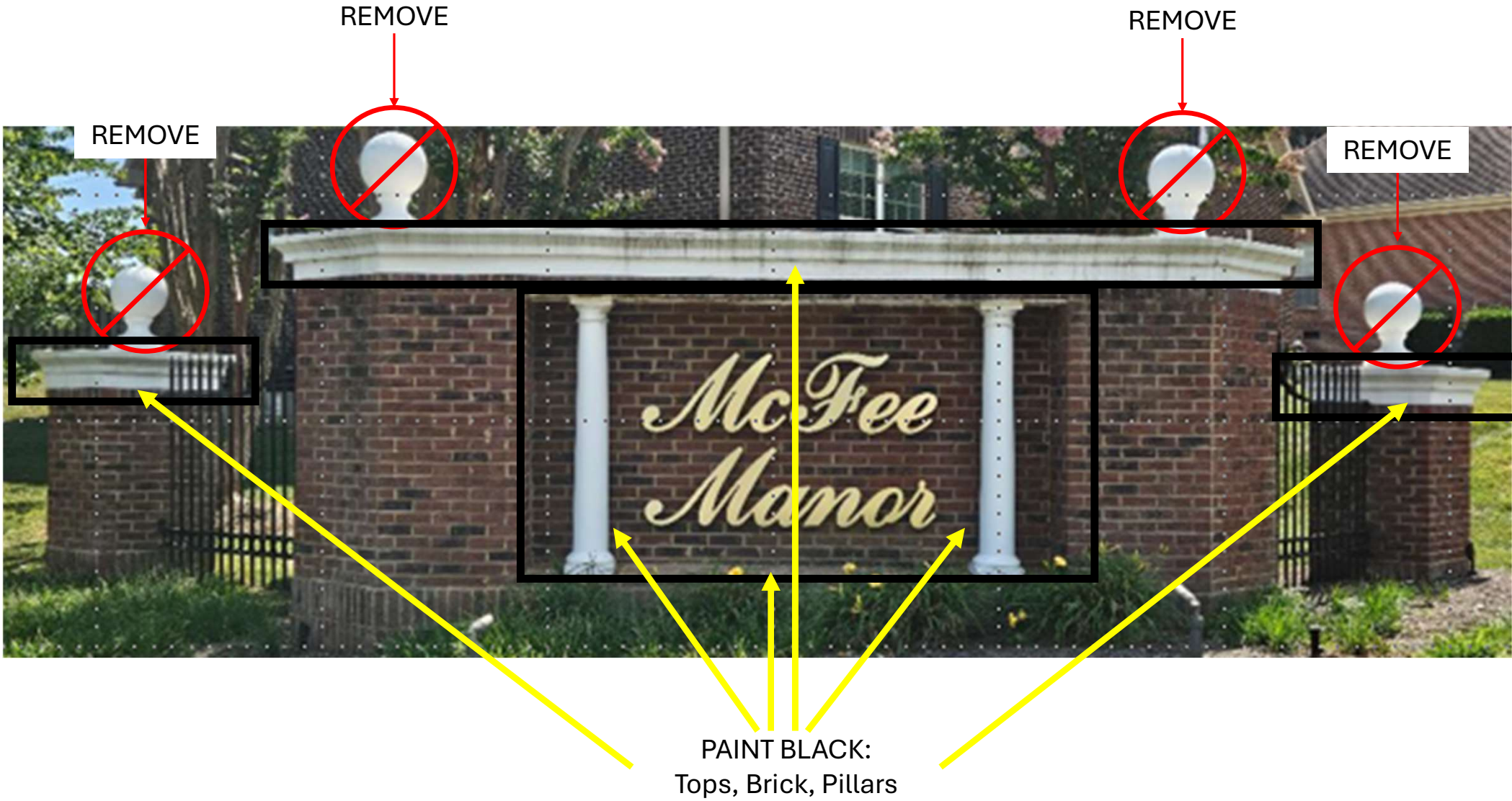
REMOVE
REMOVE
REMOVE
REMOVE
McFee
Manor
PAINT BLACK:
Tops, Brick, Pillars

KOHL'S
+ SEPHORA

VICINITY MAP

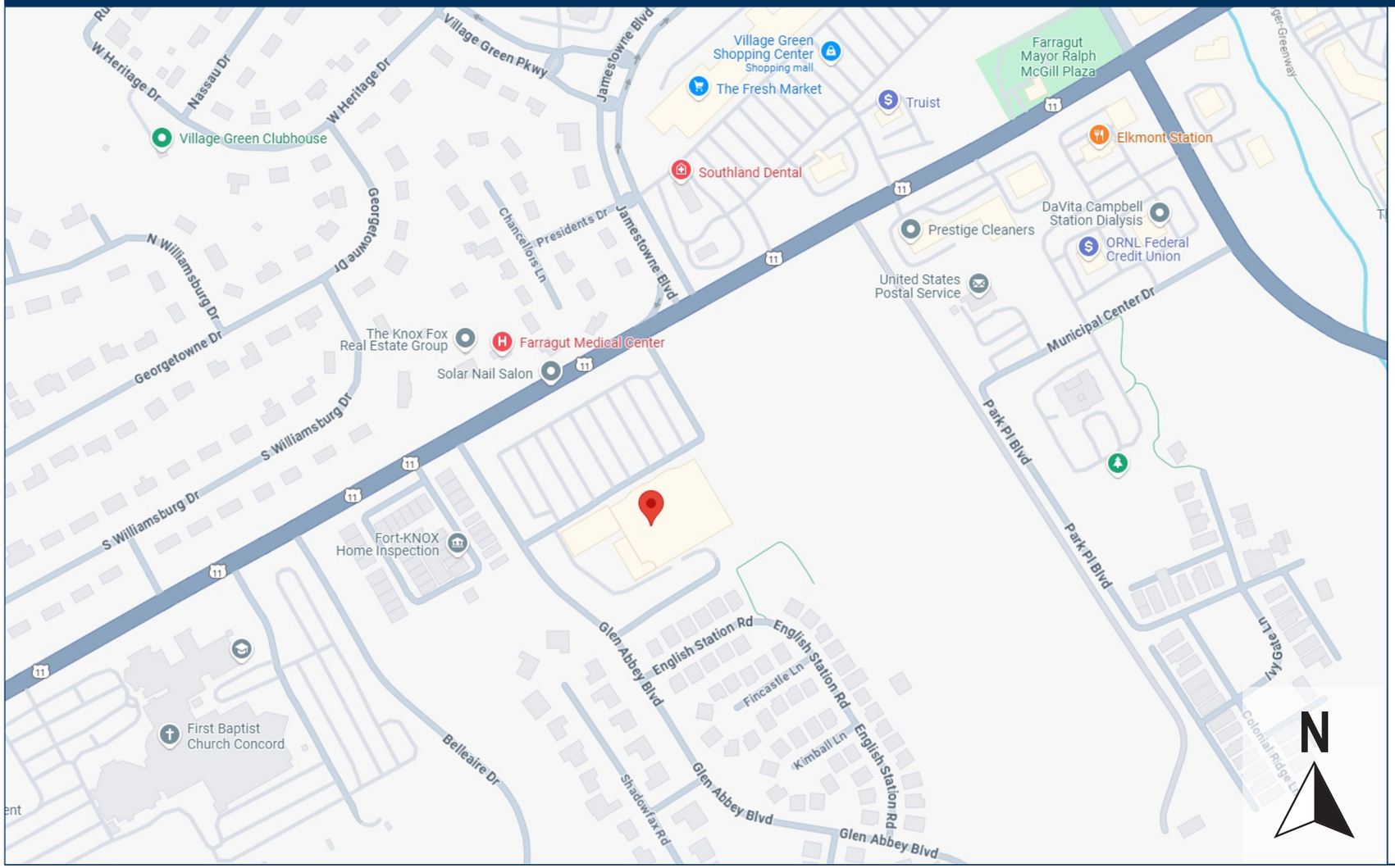

SIGN CODE REVIEW

SCALE: NTS

JONES SIGN Your Vision. Accomplished. A MORTENSEN COMPANY	JOB #: 299801_R1 DATE: 11.01.2024 DESIGNER: L. HOLTON SALES REP: X. XXXXXX PROJ MGR: E. BADER	REQUIRED: ☐ FIELD SURVEY ☐ PAINT COLOR ☐ FONTS ☐ VECTOR ARTWORK ☐ CLIENT PMS COLOR ☐ ENGINEERING OTHER:	LANDLORD APPROVAL DATE CLIENT APPROVAL DATE	KOHL'S + SEPHORA	KOHLS + SEPHORA 11530 KINGSTON PIKE FARRAGUT, TN 37934	SHEET NUMBER 2.0

This is an original, unpublished drawing by Jones Sign Co., Inc. It is for your personal use in conjunction with a project being planned for you by JONES SIGN. It is not to be shown to anyone outside of your organization, nor is it to be used, reproduced, copied or exhibited in any fashion. Use of this design or the salient elements of this design in any sign done by any other company, without the express written permission of JONES SIGN, is forbidden by law and carries a civil forfeiture of up to 25% of the purchase price of the sign. JONES SIGN will endeavor to closely match colors, including PMS, where specified. We cannot guarantee exact matches due to varying compatibility of surface materials and paints used. All sizes and dimensions are illustrated for client's conception of project and are not to be understood as being exact size or exact scale.

TP2 - Kingston Pike Frontage

KOHL'S + SEPHORA

SITEPLAN

SCALE: NTS

SCOPE OF WORK

EXTERIOR SIGNS		QTY
TP.1	REFACE EXISTING D/F MONUMENT SIGN	2
TP.2	REFACE EXISTING D/F MONUMENT SIGN	2

INTERIOR SIGNS	QTY

JONES SIGN
Your Vision. Accomplished.
A Mortensen Company

JOB #: 299801_R1
DATE: 11.01.2024
DESIGNER: L. HOLTON
SALES REP: X. XXXXXX
PROJ MGR: E. BADER

REQUIRED:
☐ FIELD SURVEY ☐ PAINT COLOR ☐ FONTS
☐ VECTOR ARTWORK ☐ CLIENT PMS COLOR ☐ ENGINEERING
OTHER:

LANDLORD APPROVAL DATE
CLIENT APPROVAL DATE

KOHL'S + SEPHORA

KOHLS + SEPHORA
11530 KINGSTON PIKE
FARRAGUT, TN 37934

SHEET NUMBER
3.0

This is an original, unpublished drawing by Jones Sign Co., Inc. It is for your personal use in conjunction with a project being planned for you by JONES SIGN. It is not to be shown to anyone outside of your organization, nor is it to be used, reproduced, copied or exhibited in any fashion. Use of this design or the salient elements of this design in any sign done by any other company, without the express written permission of JONES SIGN, is forbidden by law and carries a civil forfeiture of up to 25% of the purchase price of the sign. JONES SIGN will endeavor to closely match colors, including PMS, where specified. We cannot guarantee exact matches due to varying compatibility of surface materials and paints used. All sizes and dimensions are illustrated for client's conception of project and are not to be understood as being exact size or exact scale.

TP2 - Kingston Pike Frontage

TP.2 REFACE EXISTING D/F MONUMENT SIGN WITH ALUMINUM SIGN FACES - (QTY: 2 FACES) OPTION 1

SQUARE FOOTAGE: 32

EXISTING - SIDE 1
SCALE: N.T.S

PROPOSED - SIDE 1
SCALE: N.T.S

EXISTING - SIDE 2
SCALE: N.T.S

PROPOSED - SIDE 2
SCALE: N.T.S

FRONT VIEW
SCALE: 1/2" = 1'-0"

STACKED LAYOUT

SPECIFICATIONS:

1. .125" ALUMINUM FACES ROUTED PAINTED P-1
2. BACKED WITH WHITE ACRYLIC
3. PAINT EXISTING CABINET RETURNS P-1

NOTES:
1. REMOVE & SCRAP EXISTING FACES
2. LOGO COPY TO BE EITHER 3" FROM THE LEFT AND RIGHT SIDES OF THE VO OR 2" FROM THE TOP OF THE APOSTROPHE TO TOP OF VO AND BOTTOM OF COPY TO BOTTOM OF VO - PER APPROVED SIZING STANDARD FROM CLIENT

COLORS / FINISHES:

P-1 SHERWIN WILLIAMS 6990 CAVIAR
MATTE FINISH

JONES SIGN
Your Vision. Accomplished.
A Mortensen Company

JOB #: **299801_R1**
DATE: 11.01.2024
DESIGNER: L. HOLTON
SALES REP: X. XXXXXX
PROJ MGR: E. BADER

REQUIRED:
☐ FIELD SURVEY ☐ PAINT COLOR ☐ FONTS
☐ VECTOR ARTWORK ☐ CLIENT PMS COLOR ☐ ENGINEERING
OTHER:

LANDLORD APPROVAL DATE
CLIENT APPROVAL DATE

KOHL'S + SEPHORA

KOHLS + SEPHORA
11530 KINGSTON PIKE
FARRAGUT, TN 37934

SHEET NUMBER
6.0

This is an original, unpublished drawing by Jones Sign Co., Inc. It is for your personal use in conjunction with a project being planned for you by JONES SIGN. It is not to be shown to anyone outside of your organization, nor is it to be used, reproduced, copied or exhibited in any fashion. Use of this design or the salient elements of this design in any sign done by any other company, without the express written permission of JONES SIGN, is forbidden by law and carries a civil forfeiture of up to 25% of the purchase price of the sign. JONES SIGN will endeavor to closely match colors, including PMS, where specified. We cannot guarantee exact matches due to varying compatibility of surface materials and paints used. All sizes and dimensions are illustrated for client's conception of project and are not to be understood as being exact size or exact scale.

KOHL'S
+ SEPHORA

VICINITY MAP

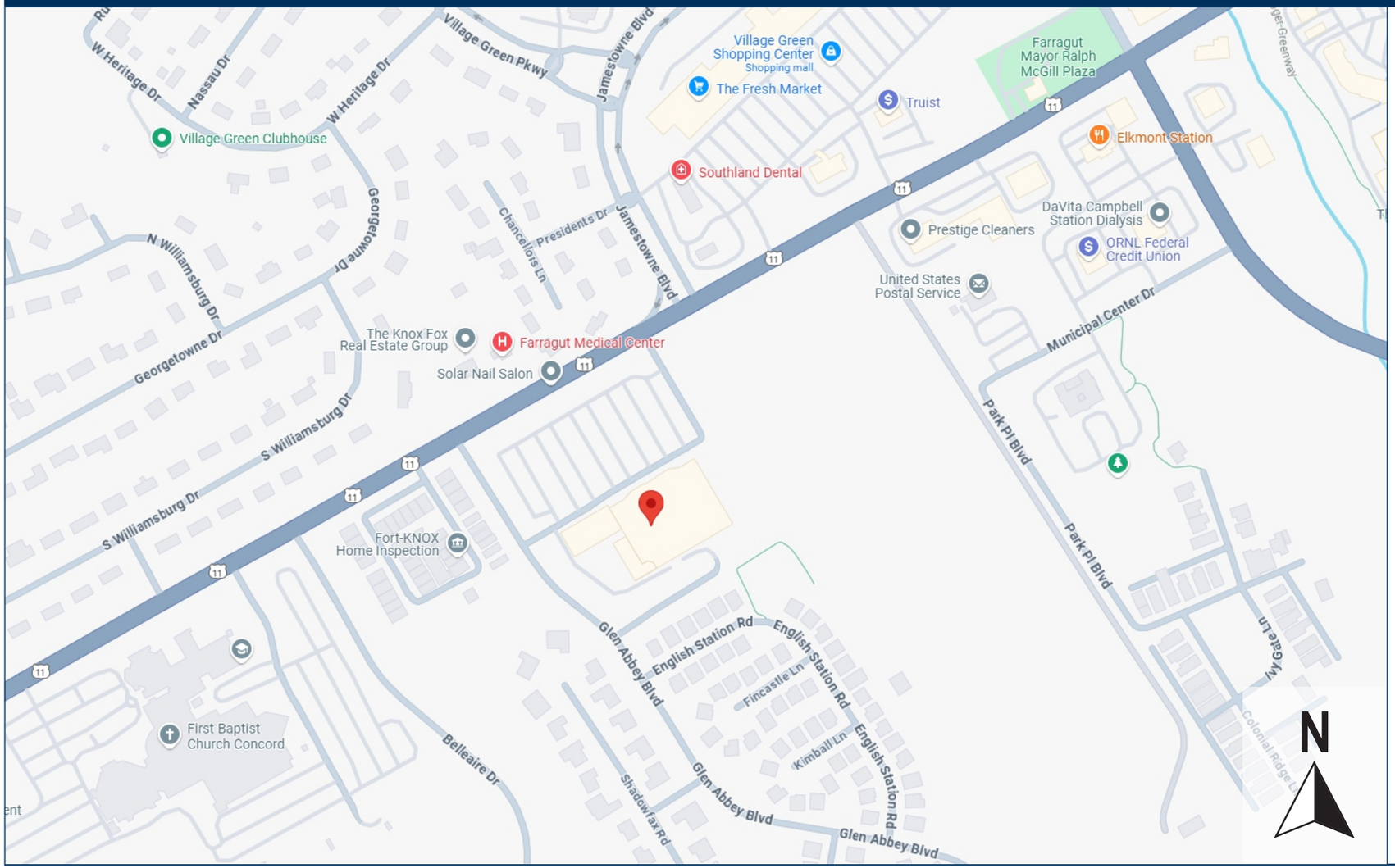

SIGN CODE REVIEW

SCALE: NTS

JONES SIGN Your Vision. Accomplished. A MORTENSEN COMPANY	JOB #: 299801_R1 DATE: 11.01.2024 DESIGNER: L. HOLTON SALES REP: X. XXXXXX PROJ MGR: E. BADER	REQUIRED: ☐ FIELD SURVEY ☐ PAINT COLOR ☐ FONTS ☐ VECTOR ARTWORK ☐ CLIENT PMS COLOR ☐ ENGINEERING OTHER:	LANDLORD APPROVAL DATE CLIENT APPROVAL DATE	KOHL'S + SEPHORA	KOHLS + SEPHORA 11530 KINGSTON PIKE FARRAGUT, TN 37934	SHEET NUMBER 2.0

This is an original, unpublished drawing by Jones Sign Co., Inc. It is for your personal use in conjunction with a project being planned for you by JONES SIGN. It is not to be shown to anyone outside of your organization, nor is it to be used, reproduced, copied or exhibited in any fashion. Use of this design or the salient elements of this design in any sign done by any other company, without the express written permission of JONES SIGN, is forbidden by law and carries a civil forfeiture of up to 25% of the purchase price of the sign. JONES SIGN will endeavor to closely match colors, including PMS, where specified. We cannot guarantee exact matches due to varying compatibility of surface materials and paints used. All sizes and dimensions are illustrated for client's conception of project and are not to be understood as being exact size or exact scale.

TP1 - Glen Abbey Blvd. Frontage

KOHL'S + SEPHORA

SITEPLAN

SCALE: NTS

SCOPE OF WORK

EXTERIOR SIGNS		QTY
TP.1	REFACE EXISTING D/F MONUMENT SIGN	2
TP.2	REFACE EXISTING D/F MONUMENT SIGN	2

INTERIOR SIGNS	QTY

JONES SIGN
Your Vision. Accomplished.
A Mortensen Company

JOB #: 299801_R1
DATE: 11.01.2024
DESIGNER: L. HOLTON
SALES REP: X. XXXXXX
PROJ MGR: E. BADER

REQUIRED:
☐ FIELD SURVEY ☐ PAINT COLOR ☐ FONTS
☐ VECTOR ARTWORK ☐ CLIENT PMS COLOR ☐ ENGINEERING
OTHER:

LANDLORD APPROVAL DATE
CLIENT APPROVAL DATE

KOHL'S + SEPHORA

KOHLS + SEPHORA
11530 KINGSTON PIKE
FARRAGUT, TN 37934

SHEET NUMBER
3.0

This is an original, unpublished drawing by Jones Sign Co., Inc. It is for your personal use in conjunction with a project being planned for you by JONES SIGN. It is not to be shown to anyone outside of your organization, nor is it to be used, reproduced, copied or exhibited in any fashion. Use of this design or the salient elements of this design in any sign done by any other company, without the express written permission of JONES SIGN, is forbidden by law and carries a civil forfeiture of up to 25% of the purchase price of the sign. JONES SIGN will endeavor to closely match colors, including PMS, where specified. We cannot guarantee exact matches due to varying compatibility of surface materials and paints used. All sizes and dimensions are illustrated for client's conception of project and are not to be understood as being exact size or exact scale.

TP1 - Glen Abbey Blvd. Frontage

TP.1 REFACE EXISTING D/F MONUMENT SIGN WITH ALUMINUM SIGN FACES - (QTY: 2 FACES) OPTION 1

SQUARE FOOTAGE: 32

EXISTING - SIDE 1
SCALE: N.T.S

PROPOSED - SIDE 1
SCALE: N.T.S

EXISTING - SIDE 2
SCALE: N.T.S

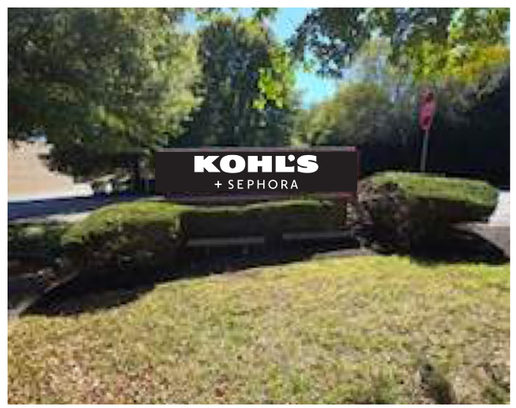

PROPOSED - SIDE 2
SCALE: N.T.S

FRONT VIEW
SCALE: 1/2" = 1'-0"

STACKED LAYOUT

SPECIFICATIONS:

1. .125" ALUMINUM FACES ROUTED PAINTED P-1
2. BACKED WITH WHITE ACRYLIC
3. PAINT EXISTING CABINET RETURNS P-1

NOTES:
1. REMOVE & SCRAP EXISTING FACES
2. LOGO COPY TO BE EITHER 3" FROM THE LEFT AND RIGHT SIDES OF THE VO OR 2" FROM THE TOP OF THE APOSTROPHE TO TOP OF VO AND BOTTOM OF COPY TO BOTTOM OF VO - PER APPROVED SIZING STANDARD FROM CLIENT

COLORS / FINISHES:

P-1 SHERWIN WILLIAMS 6990 CAVIAR
MATTE FINISH

JONES SIGN
Your Vision. Accomplished.
A MORTENSEN COMPANY

JOB #: **299801_R1**
DATE: 11.01.2024
DESIGNER: L. HOLTON
SALES REP: X. XXXXXX
PROJ MGR: E. BADER

REQUIRED:
☐ FIELD SURVEY ☐ PAINT COLOR ☐ FONTS
☐ VECTOR ARTWORK ☐ CLIENT PMS COLOR ☐ ENGINEERING
OTHER:

LANDLORD APPROVAL DATE
CLIENT APPROVAL DATE

KOHL'S + SEPHORA

KOHLS + SEPHORA
11530 KINGSTON PIKE
FARRAGUT, TN 37934

SHEET NUMBER
4.0

This is an original, unpublished drawing by Jones Sign Co., Inc. It is for your personal use in conjunction with a project being planned for you by JONES SIGN. It is not to be shown to anyone outside of your organization, nor is it to be used, reproduced, copied or exhibited in any fashion. Use of this design or the salient elements of this design in any sign done by any other company, without the express written permission of JONES SIGN, is forbidden by law and carries a civil forfeiture of up to 25% of the purchase price of the sign. JONES SIGN will endeavor to closely match colors, including PMS, where specified. We cannot guarantee exact matches due to varying compatibility of surface materials and paints used. All sizes and dimensions are illustrated for client's conception of project and are not to be understood as being exact size or exact scale.